THE PROPERTY OF THE DRAWING IS ESTABILISHED BY LAW. IT IS FORBIDDEN TO PRODUCE OR SHOW IT TO THIRD PART, WITHOUT A WRITTEN AGREEMENT.

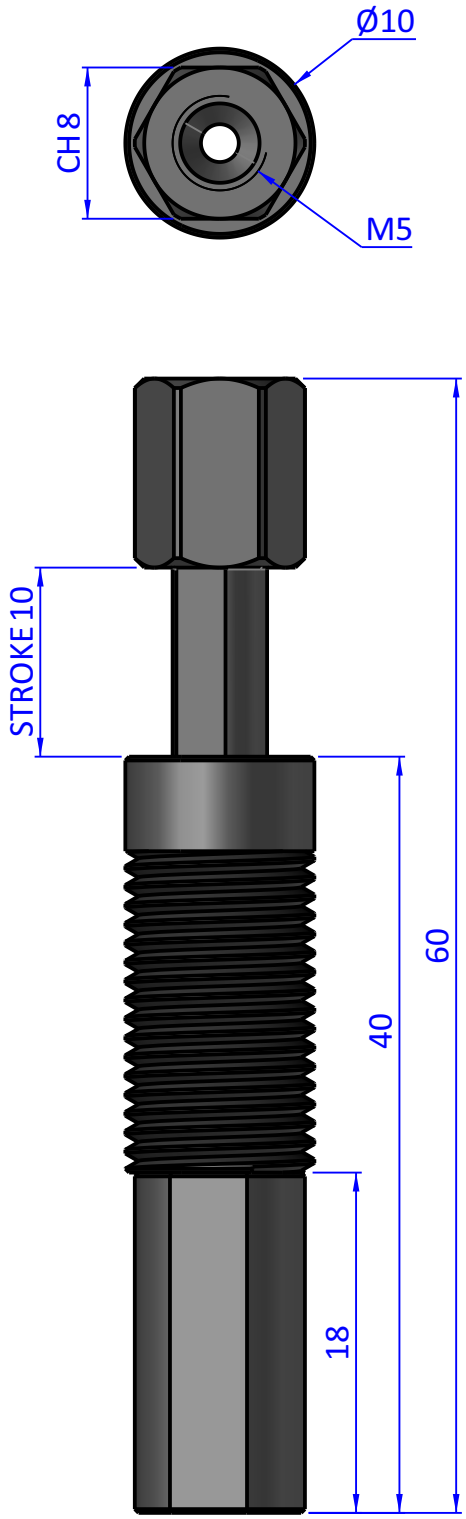

FPSERVICES AUTOMATION

Format A4 UNI 936-76	GENERAL TOLERANCE UNI - ISO 2768 CLASSE f	DESCRIPTION EC.SDNG.1010	DESIGNED FROM FPS Automation REVIEW A DATE 05/11/2026 WEIGHT 0,008kg CODE EC.SDNG.1010